MP80-480D

- Multi-TMOV Technology
- UL1449 Type 1 LISTED
- 88-220kA Surge Current Rating
- Visual fault indicator (LED per phase)
- Remote Alarm
- UL 1283 EMI Filter (Option available)
- 10-Year warranty

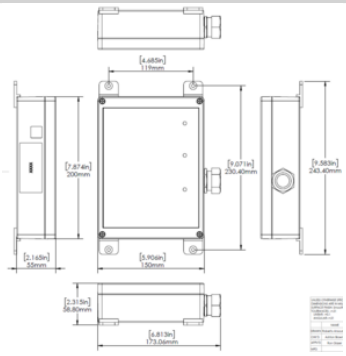

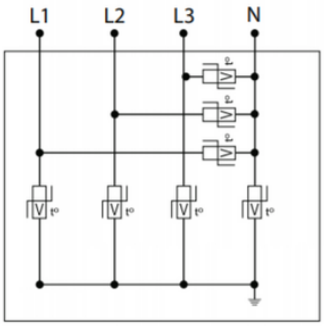

Características eléctricas		
POWER SPD TYPE		UL1449 TYPE 1 LISTED
TENSION	(V)	480
AC/DC/DC PV/RF		AC
FASE	(PH)	3D
AMPS	(A)	N/A
AMBIENT MIN	(C)	-35
AMBIENT MAX	(C)	85
MODOS		L-L, L-G
VPR	(V)	3000/-/1800/-
MCOV	(V)	1100/-/550/-
IN	(kA)	20
IMAX	(kA)	88
Características mecánicas		
TECNOLOGIA		Multi-TMOV
CONFIGURACION DE RED		3PH, 3W+G, Delta
FORMA DE CONEXION		36" #10 AWG LEADS
MONTAJE		FLANGE MOUNT
MATERIAL		Polycarbonate
NEMA RATING (IP RATING)		4X (IP67)
DESCONEXION SEGURA		Yes, no upstream over current protection required
REAL-TIME DIAGNOSTICS		LED. Optional remote contacts.
DIMENSIONS		See diagram
Normas		
UL STANDARD		UL1449 5th Edition
UL CATEGORY		VZCA, VZCA7
UL FILE NUMBER		E326289
NORMAS		NOM-003-SCFI-2014
ENVIRONMENTAL STANDARDS		ROHS
Código		
891880		