UL TYPE 1 LISTED SPD - Imax 132kA per phase - In 20kA - NEMA Enclosure

MS100F-120T

- Multi-TMOV Technology
- UL1449 Type 1 LISTED
- 105-220kA Surge Current Rating
- Visual fault indicator, audible alarm and remote contacts
- 10-Year warranty

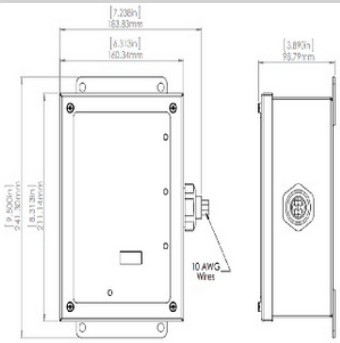

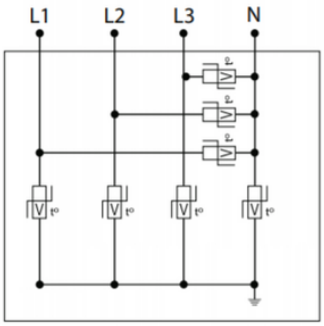

Características eléctricas		
POWER SPD TYPE		UL1449 TYPE 1 LISTED
TENSION	(V)	120/240
AC/DC/DC PV/RF		AC
FASE	(PH)	1
AMPS	(A)	N/A
AMBIENT MIN	(C)	-35
AMBIENT MAX	(C)	+85
MODOS		L-L, L-N, L-G, N-G
VPR	(V)	1000/700/700/700
MCOV	(V)	300/150/150/150
IN	(kA)	20
IMAX	(kA)	105
Características mecánicas		
TECNOLOGIA		Multi-TMOV
CONFIGURACION DE RED		1PH, 3W+G, Split Phase
FORMA DE CONEXION		36" #10 AWG LEADS
MONTAJE		FLANGE MOUNT
MATERIAL		Steel
NEMA RATING (IP RATING)		IP65
DESCONEXION SEGURA		Yes, no upstream over current protection required
REAL-TIME DIAGNOSTICS		% of protection present LED, audible alarm and remote contacts. Optional surge counter.
DIMENSIONS		See diagram
WEIGHT		6 lbs
Normas		
UL STANDARD		UL1449 5th Edition, UL1283
UL CATEGORY		VZCA, VZCA7, FOKY, FOKY7
UL FILE NUMBER		E326289
NORMAS		UL96A, ANSI C62.41/45, NOM-003-SCFI-2014, NOM-001-SCFI-1993, IEC61643-11
ENVIRONMENTAL STANDARDS		ROHS
Código		
890144		