CITEL

SURGE PROTECTORS

FOR

Photovoltaic Systems

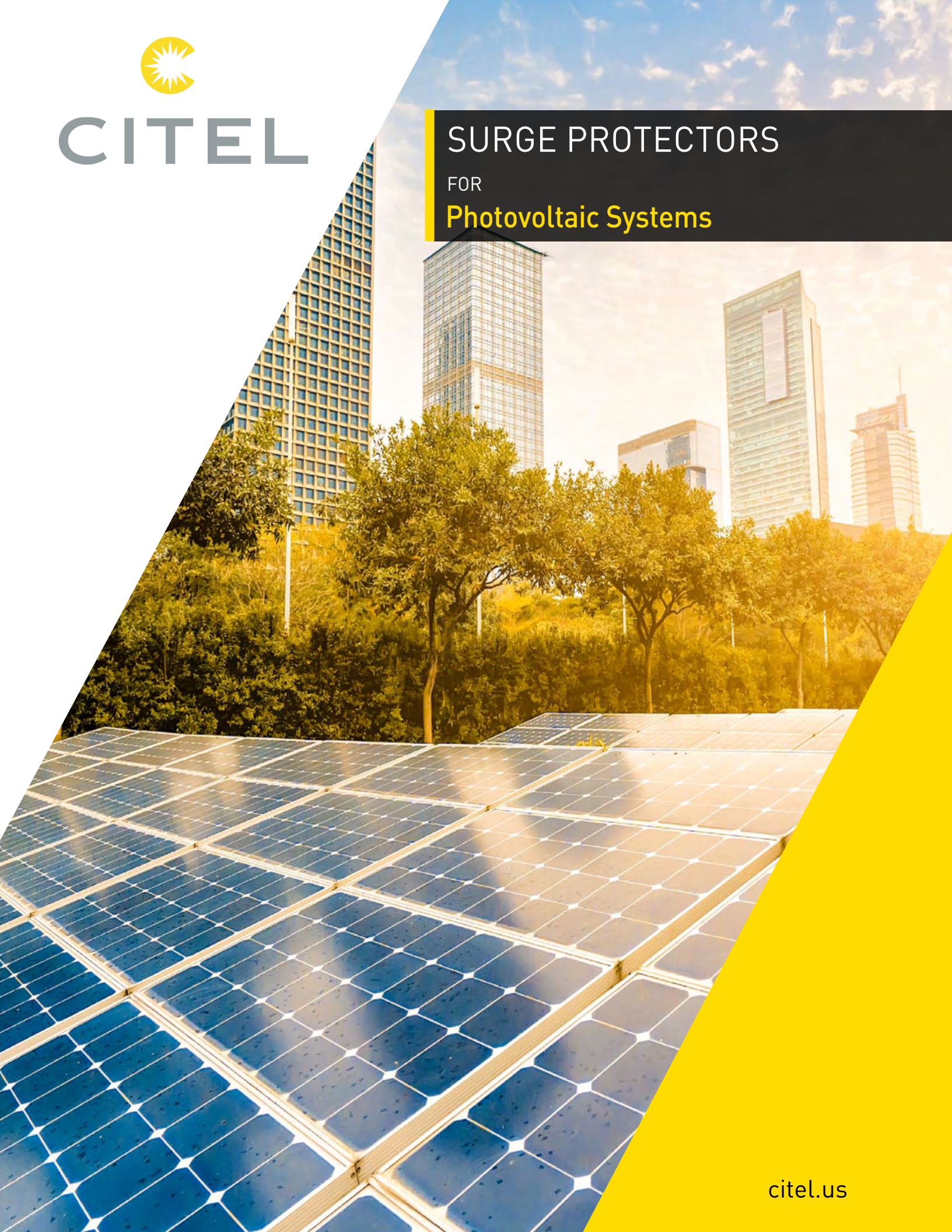

citel.us

CITEL,

the global solutions provider.

Since 1937, Citel has been an innovator in the field of Surge Protection. Today, Citel is a global leader in the development of reliable and adapted Surge Mitigation Solutions for critical applications.

Citel is unique as a manufacturer of Surge Protective Components (SPCs), Surge Protective Devices (SPDs), and coordinated protection systems.

- **Over 1 billion lines protected**
- **Local support in over 200 countries**
- **High current R&D laboratories at your disposal**

THREAT

$26B in Losses due to Power Surges

Today's increased reliance on very sensitive electronics and processes make surge protection an important discussion topic in order to avoid catastrophic business losses. The Insurance Institute for Business & Home Safety study found that $26 billion dollars was lost due to non-lightning power surges. In addition, there are about 25 million lightning strikes in the US each year that cause between $650M to $1B in losses according to the Insurance Information Institute, State Farm©.

1. Direct Strike

2. Earth Potential Rise

3. Strike on Overhead Lines

4. Coupling

5. Switching

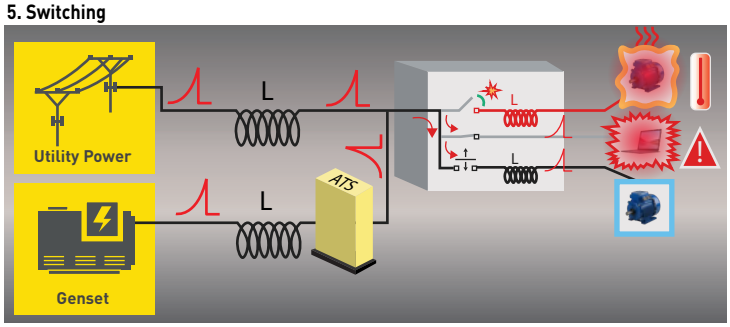

SOLUTION

Global Surge Mitigation Concept

Our philosophy is simple – determine your risk and evaluate every line (power or signal) for vulnerabilities. We call this "The Box Concept." It works equally well for a single piece of equipment or an entire facility. Once you have determined your "boxes", it is simple to develop a coordinated protection scheme to eliminate all threats from lightning and switching surges.

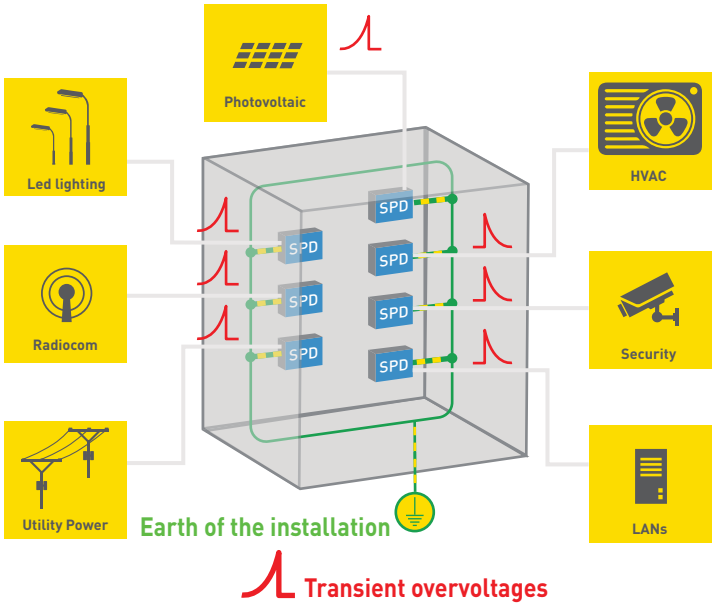

CITEL provides a wide range of surge protectors adapted to every network: **AC Power, DC Power, Telecom, Data and Coaxial.**

CITEL

COMMON PHOTOVOLTAIC ENERGY APPLICATIONS

As the technology for Photovoltaic Energy becomes more sophisticated, the cost of downtime caused by lightning strikes and power grid disturbances becomes significant. Modern Photovoltaic Energy Systems must deploy a coordinated array of Surge Protective Devices (SPDs) to ensure continuous operation.

Residential PV Systems

Household Solar Inverter

- Grid Power-Service Entrance
- Inverters
- Solar Panels
- Energy Storage Systems

Commercial & Industrial PV Systems

Facility-Mounted Solar Panels

- Grid-Tied Inverters
- String and Combiner Boxes
- Solar Panels
- Energy Storage Systems

Photovoltaic Power Plants

High-Capacity Batteries

- Grid-Tied Inverters
- String and Combiner Boxes
- Solar Panels
- Energy Storage Systems

CITEL

COORDINATED PROTECTION STRATEGY

Commercial

Grid-Connected

Residential

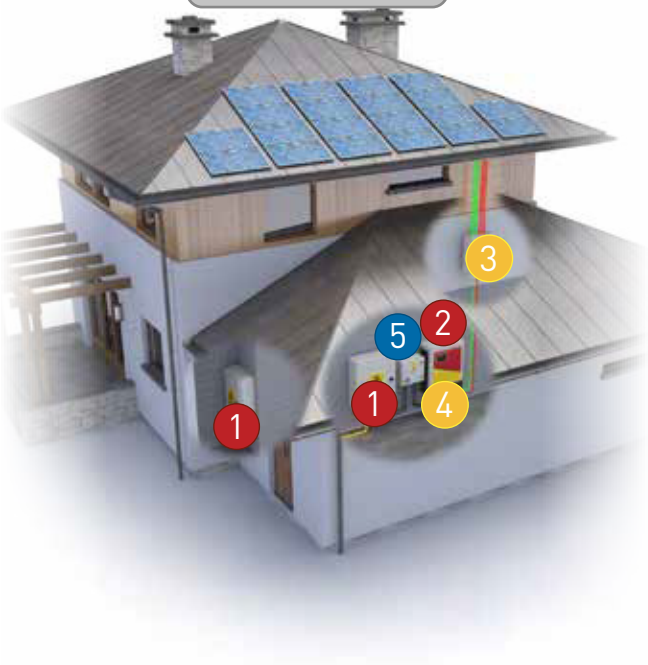

Description/Location/Model

AC Combiner Box	1	DAC100US Series
PV String Inverters	2	DAC80US Series
Inverters & Combiner Boxes	3	DS50VGPVUS Series
DC Power Supply Input	4	DS240 Series
Data & Ethernet	5	MJ8-C6A DLA Series

CITEL

RECOMMENDED PRODUCTS (TECHNICAL CHARACTERISTICS)

AC Power

Product	DAC100US	DAC80US
Application	AC Combiner Box	PV String Inverters
Voltage(s)	120, 240, 480	
Phase	3D, 3Y	
In (8/20µs)-kA	20	
Imax (8/20µs)-kA	100	80
UL Standard	Listed Type 1	

DC Power

Product	DS50PVUS	DS50VGPVS	DS240	DPVN40CUS
Application	Inverters & Combiner Boxes		Power Supply Input	Inverters & Combiners
Voltage(s)-(DC)	500, 600, 1000, 1500		up to 350	600, 1200, 1500
In (8/20µs)-kA	10	20		
Imax (8/20µs)-kA	40			
UL Standard	Listed Type 1	Listed Type 1CA	Recognized Type 4CA	UL pending

Dataline

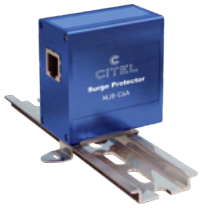

Product	MJ8-C6A	DLA
Application	Indoor Gigabit Ethernet & PoE	Internal Data Connections
Connection	Ethernet	Screw-Terminal
Voltage(s)-(DC)	60	12, 24, 48
Imax (8/20µs)-kA	16	20
UL Standard	UL 497B	

USA
Hillsborough, NC
Tel: (954) 430 6310
Email: info@citel.us
Web: citel.us

France
Head Office
Sales Department
Paris
Tel: +33 1 41 23 50 23
Email: export@citel.fr
Web: citel.fr

Factory
Reims
Tel: +33 3 26 85 74 00

Germany
Bochum
Tel: +49 2327 6057 0
Email: info@citel.de
Web: citel.de

China
Shanghai
Tel: +86 21 58 12 25 25
Email: info@citelsh.com
Web: citel.cn

India
New Delhi
Tel: +91 11 4001 81 31
Email: indiacitel@gmail.com
Web: citel.in

Thailand
Bangkok
Tel: +66 (0) 2 104 9214
Web: citel.fr

U.A.E
Dubai
Email: info@citel.ae
Web: citel.fr

Colombia
Bogota
Email: export@citel.fr
Web: citel.fr

CITEL