CITEL

SURGE PROTECTORS

FOR

EV Charging

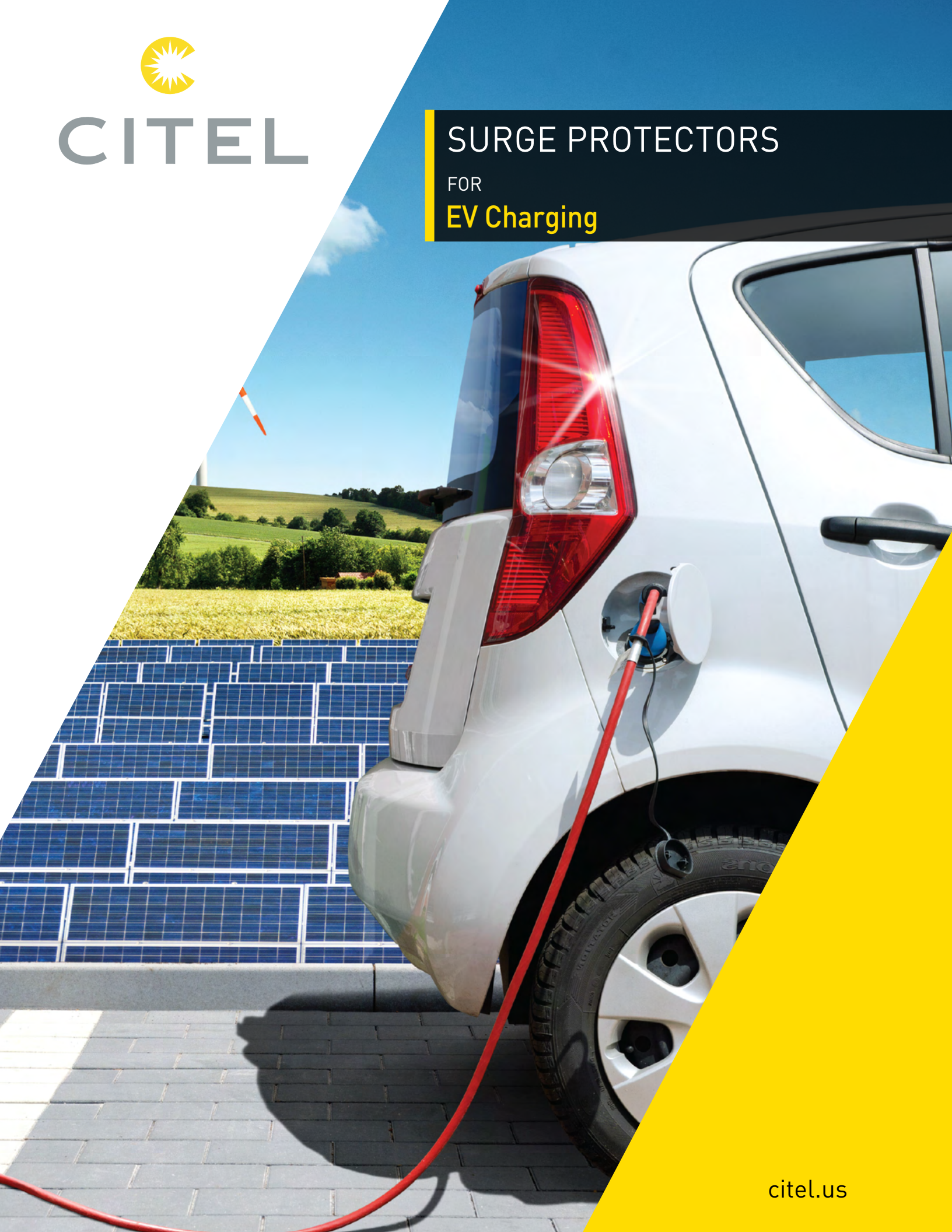

citel.us

CITEL,

the global solutions provider.

Since 1937, Citel has been an innovator in the field of Surge Protection. Today, Citel is a global leader in the development of reliable and adapted Surge Mitigation Solutions for critical applications.

Citel is unique as a manufacturer of Surge Protective Components (SPCs), Surge Protective Devices (SPDs), and coordinated protection systems.

- **Over 1 billion lines protected**
- **Local support in over 200 countries**
- **High current R&D laboratories at your disposal**

THREAT

$26B in Losses due to Power Surges

Today's increased reliance on very sensitive electronics and processes make surge protection an important discussion topic in order to avoid catastrophic business losses. The Insurance Institute for Business & Home Safety study found that $26 billion dollars was lost due to non-lightning power surges. In addition, there are about 25 million lightning strikes in the US each year that cause between $650M to $1B in losses according to the Insurance Information Institute, State Farm©.

1. Direct Strike

2. Earth Potential Rise

3. Strike on Overhead Lines

4. Coupling

5. Switching

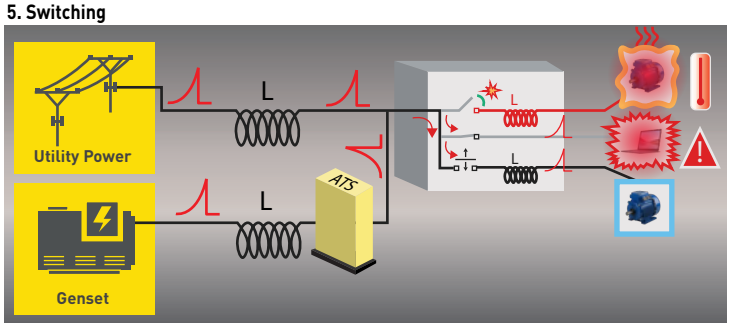

SOLUTION

Global Surge Mitigation Concept

Our philosophy is simple – determine your risk and evaluate every line (power or signal) for vulnerabilities. We call this "The Box Concept." It works equally well for a single piece of equipment or an entire facility. Once you have determined your "boxes", it is simple to develop a coordinated protection scheme to eliminate all threats from lightning and switching surges.

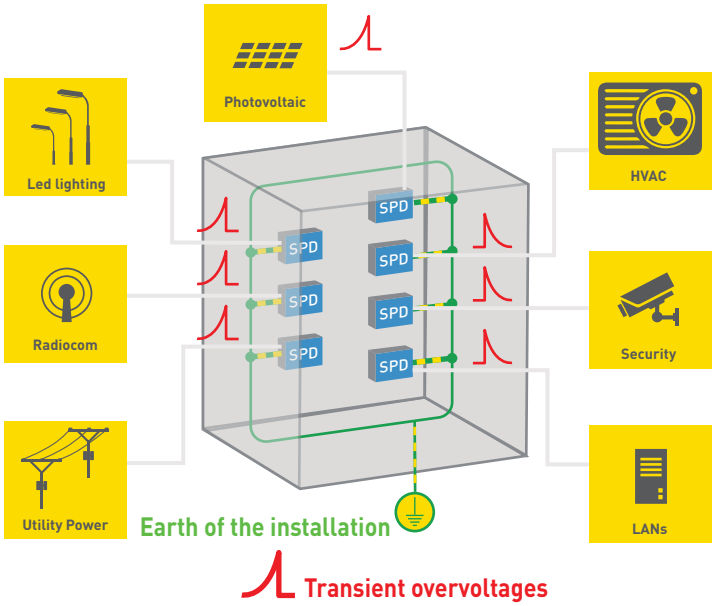

CITEL provides a wide range of surge protectors adapted to every network: **AC Power, DC Power, Telecom, Data and Coaxial.**

CITEL

COMMON EV CHARGING APPLICATIONS

As the technology for EV Charging becomes more sophisticated, damage caused by lightning strikes and power grid disturbances becomes highly consequential. EV Charging Systems must deploy a coordinated system of Surge Protective Devices (SPDs) to ensure continuous operation.

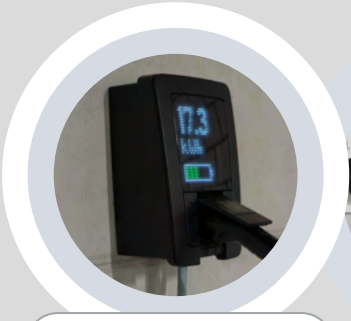

Domestic Outlet Charger

120 VAC Household Outlet

- Breaker Panel - Service Entrance
- Whole Home
- DC Inverters
- Attached Residential PV Systems

Commercial EV Charger

240 VAC Appliance or Commercial Outlet

- Grid Power - Service Entrance
- Power Distribution Units (PDU)
- Battery Storage Systems
- Point-of-Sale Interface
- Area Lighting

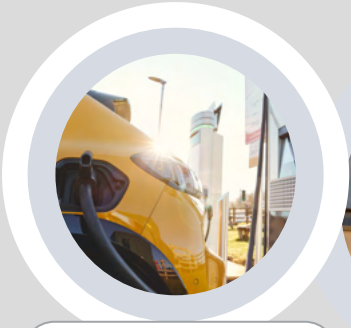

Quick-Charge Station

DC Fast-Charging Stations

- Grid Power - Service Entrance
- Battery Storage Systems
- Point-of-Sale Interface
- Area Lighting

COORDINATED PROTECTION STRATEGY

Description/Location/Model

AC Service Entrance	1 M50 Series	Inverters & Combiners	3 DS50VGPVUS
Charging Equipment	2 DAC100US Series	Internal Data	4 DLA Series
PoE Connections	5 MJ8-POE		

CITEL

RECOMMENDED PRODUCTS (TECHNICAL CHARACTERISTICS)

AC Power

Product	M50	DAC100US
Application	AC Service Entrance	Charging Equipment
Voltage(s)	120, 240, 277, 480	
Phase	Single, Split, WYE, Delta	
In (8/20µs)-kA	20	
Imax (8/20µs)-kA	50	100
UL Standard	Listed Type 1	

DC Power

Product	DS50VGPVS	DS50PVUS
Application	Inverters & Combiner Boxes	
Voltage(s)-(DC)	500, 600, 1000, 1500	
In (8/20µs)-kA	20	10
Imax (8/20µs)-kA	40	
UL Standard	Listed Type 1CA	Listed Type 1

Ethernet & Dataline

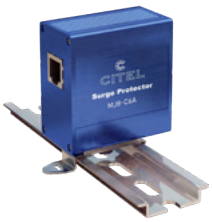

Product	MJ8-C6A	DLA
Application	Indoor Gigabit Ethernet & PoE	Internal Data Connections
Connection	Ethernet	Screw-Terminal
Voltage(s)-(DC)	60	12, 24
Imax (8/20µs)-kA	16	20
UL Standard	UL 497B	

USA
Hillsborough, NC
Tel: (954) 430 6310
Email: info@citel.us
Web: citel.us

France
Head Office
Sales Department
Paris
Tel: +33 1 41 23 50 23
Email: export@citel.fr
Web: citel.fr

Factory
Reims
Tel: +33 3 26 85 74 00

Germany
Bochum
Tel: +49 2327 6057 0
Email: info@citel.de
Web: citel.de

China
Shanghai
Tel: +86 21 58 12 25 25
Email: info@citelsh.com
Web: citel.cn

India
New Delhi
Tel: +91 11 4001 81 31
Email: indiacitel@gmail.com
Web: citel.in

Thailand
Bangkok
Tel: +66 (0) 2 104 9214
Web: citel.fr

U.A.E
Dubai
Email: info@citel.ae
Web: citel.fr

Colombia
Bogota
Email: export@citel.fr
Web: citel.fr

CITEL