UL RECOGNIZED TYPE 4CA - Imax 40kA - In 20kA - Replaceable Module

DS44S-120/G

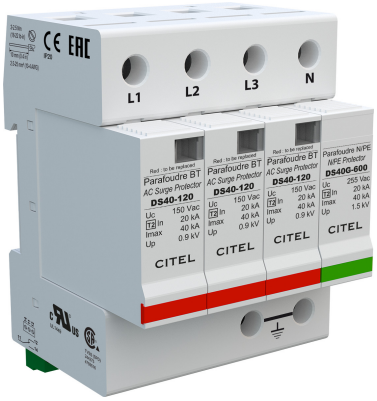

- MOV Technology
- UL1449 Type 4CA
- 40kA Surge Current Rating
- Visual fault indicator and remote contacts
- 10-Year warranty

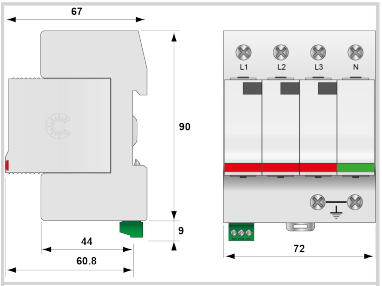

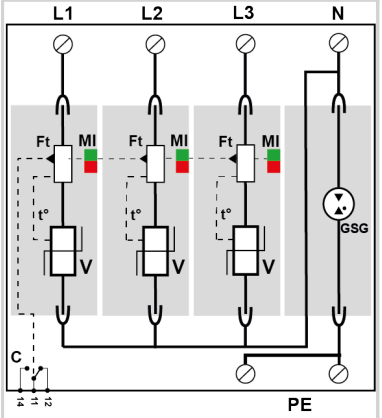

V: High-energy varistor
GSG: Specific gas tube
Ft: Thermal fuse
C: Remote signaling contact
t°: Thermal disconnection system
MI: Disconnection indicator

Electrical Characteristics		
Network		120/208 V
Nominal line voltage	Un	120 Vac
Max. AC operating voltage	Uc	150 Vac
Max. discharge current *max. withstand @ 8/20 µs by pole*	Imax	40 kA
Total Maximum discharge current *max. total withstand @ 8/20 µs*	Imax Total	40 kA
Connection mode(s)		L/N and N/PE
Protection mode(s)		Common/Differential mode
Residual voltage at 5 kA *@ 5 kA (8/20µs)*	Up-5kA	0.6 kV
Protection level L/N *@ In (8/20µs)*	Up L/N	0.9 kV
Protection level N/PE *@ In (8/20µs)*	Up N/PE	1.5 kV
POWER SPD TYPE		UL1449 5th Ed. TYPE 4CA
VOLTS	(V)	240/120
AC/DC/DC PV/RF		AC
PHASE	(PH)	3Y
AMPS	(A)	N/A
AMBIENT MIN	(C)	-40
AMBIENT MAX	(C)	+85
MODES		L-L, L-N, L-G, N-G
MLV	(V)	1700/1040/1690/1090
MCOV	(V)	300/150/150/255
IN *15 impulses 8/20µs*	(kA)	20
SCCR	(kA)	n/a
IMAX *8/20µs*	(kA)	40
Iimp *10/350µs*	(kA)	4
Mechanical Characteristics		
Technology		MOV+GDT
Connection to Network		By screw terminals: 2.5-25mm² / by bus
Format		Plug-in modular box
Mounting		Symmetrical rail 35 mm (EN 60715)
Operating temperature	Tu	-40/+85°C
Protection rating		IP20
Failsafe mode		Disconnection from AC network
TECHNOLOGY		MOV+GSG
NETWORK CONFIGURATION		3PH, 4W+G, Wye
CONNECTION METHOD		SPD-Screw Terminal (8-12AWG), Terminal blocks 6AWG
MOUNTING		Din Rail
MATERIAL		Thermoplastic UL94-V0
NEMA RATING (IP RATING)		NEMA 2 (IP20)
FAIL-SAFE BEHAVIOR		Disconnection via fuse-link
REAL-TIME DIAGNOSTICS		Visual indicator and remote contacts
DIMENSIONS		See diagram
WEIGHT		1.20 lbs
SPARE PART		DSM40-120, DSM40G-600
Standards		
Certification		cRUus
Environmental standards		EU RoHS
UL STANDARD		UL1449 5th Edition
UL CATEGORY		VZCA2, VZCA8
UL FILE NUMBER		E326289
STANDARDS		NOM-003-SCFI-2014, NOM-001-SCFI-1993

UL RECOGNIZED TYPE 4CA - Imax 40kA - In 20kA - Replaceable Module

DS44S-120/G

Part number
461632