DC Power SPD- Imax 40kA - In 20kA - Modular

DS240S-130DC



- MOV Technology
- UL1449 Type 4CA
- 40kA Surge Current Rating per module
- Visual fault indicator and remote contacts
- 10-Year warranty

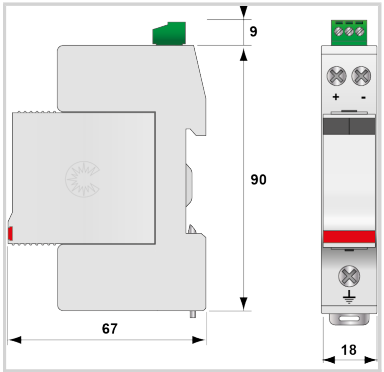

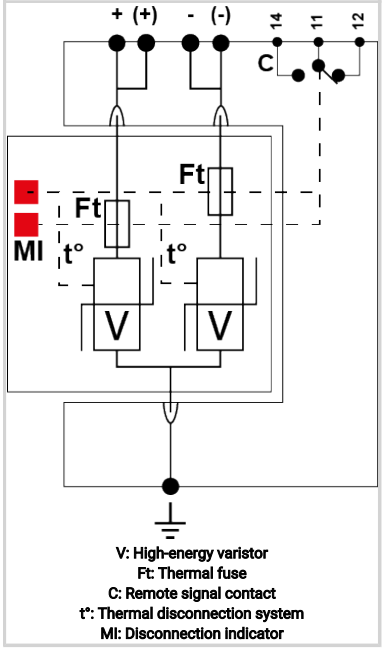

V: High-energy varistor
Ft: Thermal fuse
C: Remote signal contact
t°: Thermal disconnection system
MI: Disconnection indicator

Electrical Characteristics		
Network		DC or PV network 130Vdc
Max. AC operating voltage	Uc	150 Vac
Max. DC operating voltage	Uc	180 Vdc
Max. load current @25°C	IL	50 A
Max. discharge current *max. withstand @ 8/20 µs by pole*	Imax	40 kA
Total Maximum discharge current *max. total withstand @ 8/20 µs*	Imax Total	80 kA
Connection mode(s)		+/-/PE
Protection mode(s)		Common mode
POWER SPD TYPE		UL1449 5th Ed. TYPE 4CA
VOLTS	(V)	130
AC/DC/DC PV/RF		DC
PHASE	(PH)	
AMPS	(A)	N/A
AMBIENT MIN	(C)	-40
AMBIENT MAX	(C)	+85
MODES		DC+-G or DC--G
MLV	(V)	1720/1320/1280
MCOV	(V)	180/180/180
IN *15 impulses 8/20µs*	(kA)	20
SCCR	(kA)	n/a
IMAX *8/20µs*	(kA)	40
Mechanical Characteristics		
Technology		MOV
Connection to Network		By screw terminals: 1.5-10mm² (actives wires) and 2.5-25mm² (ground)
Format		Plug-in modular box
Mounting		Symmetrical rail 35 mm (EN 60715)
Operating temperature	Tu	-40/+85°C
Protection rating		IP20
Failsafe mode		Disconnection from DC network
TECHNOLOGY		MOV
NETWORK CONFIGURATION		2W+G
CONNECTION METHOD		SPD-Screw Terminal (8-12AWG), Terminal blocks 6AWG
MOUNTING		Wall mount
MATERIAL		Thermoplastic UL94-V0
NEMA RATING (IP RATING)		NEMA 2 (IP20)
FAIL-SAFE BEHAVIOR		Disconnection via fuse-link
REAL-TIME DIAGNOSTICS		Visual indicator and remote contacts
DIMENSIONS		See diagram
WEIGHT		0.30 lbs

DS240S-130DC

SPARE PART		DSM240-130DC
Standards		
Certification		cRUus
Environmental standards		EU RoHS
UL STANDARD		UL1449 5th Edition
UL CATEGORY		VZCA2, VZCA8
UL FILE NUMBER		E326289
STANDARDS		IEC 61643-11, NOM-003-SCFI-2014, NOM-001-SCFI-1993
Part number		
310811		